Chassis Systems Control

iBooster – Vacuum-independent electro-mechanical brake booster

BOSCH
Invented for life

Customer benefits

- Scalable solution for vehicles with a hybrid or electric drive and/or vehicles with demanding requirements on pressure build-up dynamics and pressure control accuracy
- Adaptive pedal characteristics thanks to programmable pedal characteristic curves
- Virtually 100 percent recuperation thanks to high blending capability in combination with ESP® *hev*
- Reduced installation costs through omission of unnecessary hardware components
- Flexible installation due to the ability to rotate the iBooster, and reduced installation volumes compared with vacuum brake booster and vacuum pump
- Meets the requirements placed on a redundant braking system for fully automated driving

More efficient combustion engines, new driving modes (such as coasting or fully electric driving), as well as modern driver assistance functions require modular and scalable vacuum-independent solutions for the braking system. The widely used vacuum-based approach to brake boosters, however, only offers limited opportunities to recuperate energy, and always provides the same level of boost to the driver‘s pedal force, which is only defined once.

Characteristics

With the iBooster, Bosch has developed a vacuum-independent, electromechanical brake booster that meets the demands of a modern braking system. The iBooster can be used with all drivetrain configurations and is particularly suited to hybrid and electric vehicles.

Modern combustion engines and electric vehicles do not provide a sufficient vacuum level for the vacuum brake booster; therefore, mechanical or electric vacuum pumps must be used. Energy is required to generate the vacuum in traditional braking systems, but the iBooster operates completely without a vacuum source. This means that a mechanical vacuum pump is no longer required. The removal of the vacuum pump alone saves fuel and reduces CO_2 emissions. Furthermore, functions that reduce fuel consumption (such as start/stop or coasting, during which time the engine is temporarily switched off) are used more comprehensively.

Technical features	
Supporting force	5,5 kN (equal to 8+9“ vacuum brake booster)
Voltage range	>9,8 V
Space required	equal to 8+9“ vacuum brake booster
Weight	approx. 5 kg
Power consumption	<1 A per 10 bar (standard braking)
Motor power	300 W mechanical

Adaptation of pedal characteristic

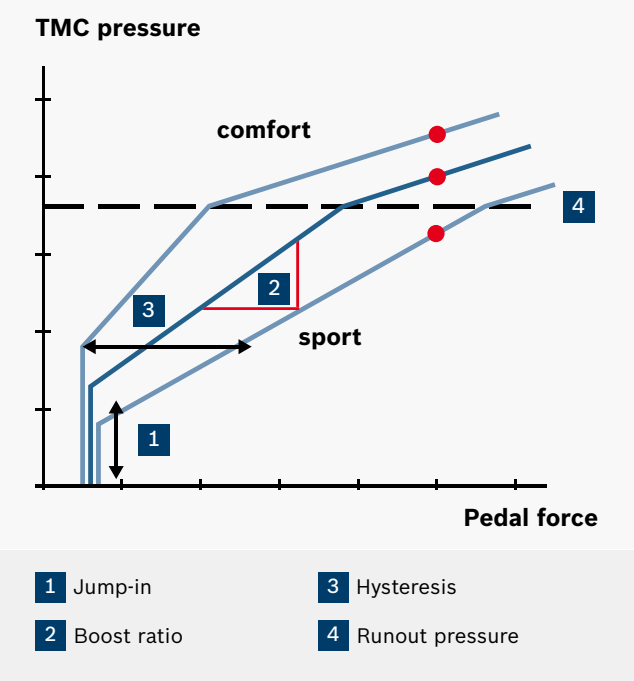

The iBooster can rotate around the longitudinal axis, which allows optimal use of the available installation space. Thanks to the iBooster’s ability to rotate, it is possible to easily integrate the unit into right-hand drive models. The space available in the engine compartment in these models often differs from that of left-hand drive models. The iBooster provides the same interfaces to the brake pedal, bulkhead and the ESP® system as today‘s vacuum brake boosters.

The pedal feel can be adjusted through the definition of the braking characteristic curves and adapted to suit vehicle manufacturer and brand-specific requirements. Thanks to this feature, the iBooster can be used for various models of a vehicle platform — each with its own individual characteristics. The iBooster can be programmed quickly and easily at the assembly plant. This feature also offers vehicle manufacturers the option of providing different driving modes in their models. The driver can select the preferred brake feel for comfortable or sports-style deceleration.

Operating principle

The control principle behind the iBooster is similar to that of vacuum brake boosters: a valve controls the air supply to provide a boost to the force applied from the driver‘s foot. With the iBooster, the actuation of the brake pedal is detected via an integrated pedal-travel sensor and this information is sent to the control unit. The control unit determines the control signals for the electric motor, while a two-stage gear unit converts the torque of the motor into the necessary boost power. The power supplied by the booster is converted into hydraulic pressure in a standard master brake cylinder.

Availability and back-up mode

The iBooster has a two-phase safety concept. The first phase takes two error scenarios into account. If the on-board power supply is not operating at full capacity, the iBooster works in power-saving mode to avoid unnecessary load on the vehicle electrical system and prevent the on-board power supply from failing. In the unlikely event that the iBooster malfunctions, the brake boost is provided via the ESP® system. In both scenarios, the braking system provides a deceleration force of 0.4 g at a pedal force of 200 Newton; this is also the case at higher pedal forces through to full deceleration.

In the second safety phase, the mechanical push-through mechanism is available as a backup if the on-board power supply fails: the driver can apply the wheel brakes on all four wheels via a hydraulic mode without the brake booster effect, thereby safely bringing the vehicle to a stop and satisfying statutory requirements in full.

Design of the iBoosters

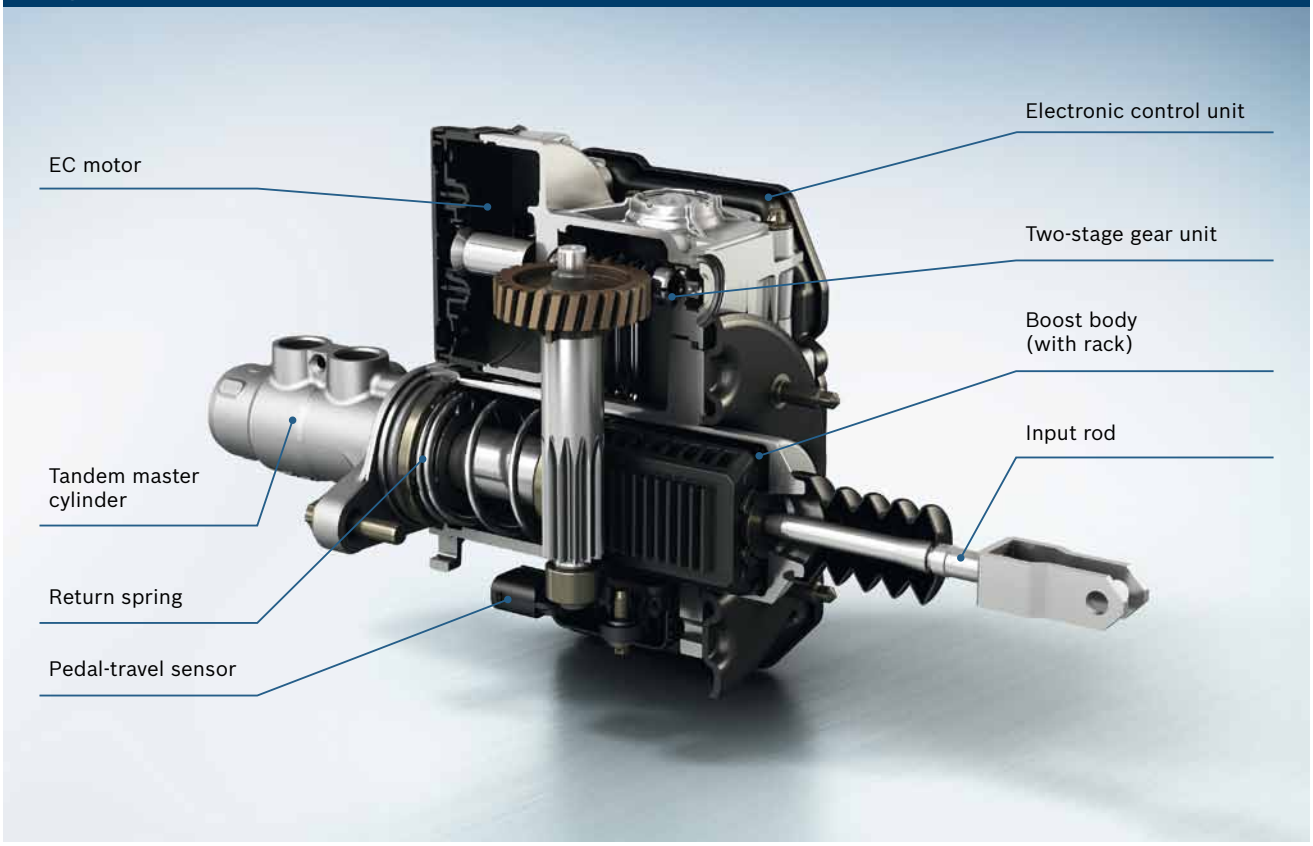

Areas of application

The iBooster completes the Bosch modular braking systems portfolio, which enables the appropriate braking system to be tailored to all vehicle configurations and customer requirements. Bosch offers the best cost-optimized solution no matter the vehicle size, drive technology or the degree to which the vehicle is equipped with assistance functions. This is particularly advantageous for vehicle models with multiple drive trains. For instance, the modular system is comprised of the iBooster or a conventional vacuum brake booster, and in terms of brake control systems, there is a choice between a classic ESP® and an ESP® *hev*, which has been specially developed for use in hybrid and electric vehicles.

Regenerative braking

Regenerative braking and the associated efficiency are key when it comes to hybrid and electric vehicles. The regenerative braking torque produced by the generator should be fully utilized wherever possible, within the limits of vehicle stability. In electric vehicles, recuperation makes a noticeable contribution to increasing the range per charge. In hybrid vehicles, regenerative braking reduces fuel consumption and CO_2 emissions – particularly in the case of frequent braking and accelerating in urban traffic.

Conventional vacuum brake boosters allow the hydraulic volume to be shifted only within a limited range – the „jump-in area“ – in order to conceal the brake torque. Furthermore, the volume cannot be concealed without repercussions for the pedal feel. Therefore, braking actions can only recuperate below 0.2 g.

The iBooster enables virtually full recuperation with deceleration values of up to 0.3 g when combined with ESP® *hev*. This is due to the iBooster's ability to adjust the supporting force at any time in line with the hydraulic conditions by means of software controls. This covers all common braking maneuvers when driving on roads. This level of recuperation enables electric vehicles to increase their range by up to 20 percent.

Power blending with the iBooster

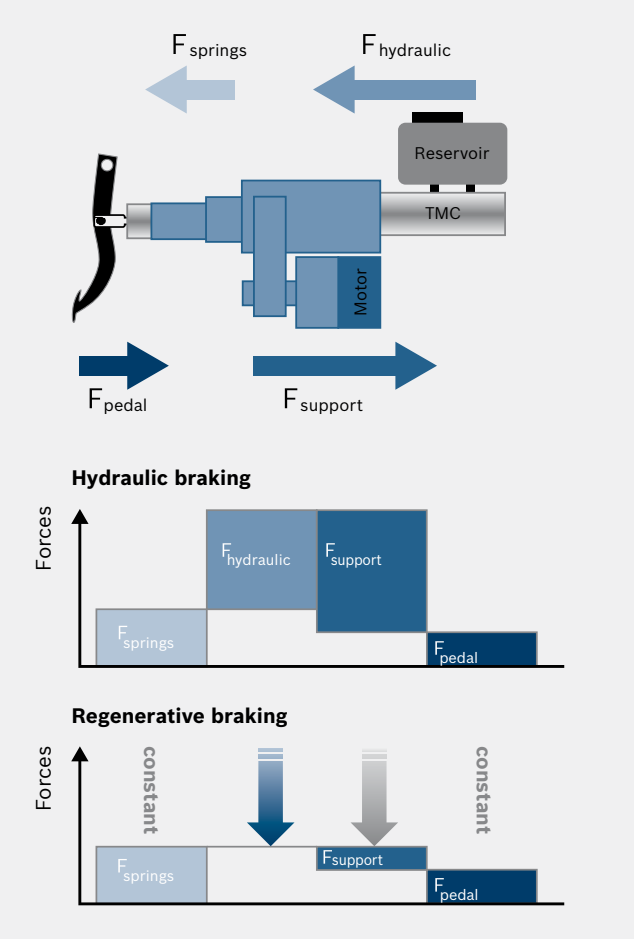

When the driver presses the brake pedal, the pedal-travel sensor measures the driver's braking request. ESP® *hev* requests a braking torque from the generator consistent with pedal travel and decelerates the vehicle. The hydraulic volume shifted into the braking system by the driver's foot is stored temporarily in the low-pressure accumulator chamber of the ESP® *hev*, meaning that no braking torque is produced at the wheel brakes. If the generator is not able to cover the braking request by means of recuperation, for example shortly before the vehicle comes to a stop, the volume available in the low-pressure accumulator chamber is shifted into the wheel brakes and the vehicle decelerates through conventional braking. The iBooster adjusts the pedal feel independently of the level of deceleration, and delivers a consistent pedal feel across the whole braking range.

Driver assistance

The electromechanical design of the iBooster also offers a host of benefits for driver assistance systems. Using the electric motor, the iBooster can build up pressure independently, without the need for the driver to apply the brake pedal. Compared with typical ESP® systems, the required braking pressure is built up three times more quickly and is adjusted with much greater accuracy through the electronic control system. This offers significant benefits for automatic emergency braking systems, for example. In a critical situation, the iBooster can automatically build up the full braking pressure in approximately 120 milliseconds. This not only helps to shorten braking distances, but, if a collision is unavoidable, it also helps reduce the impact speed and risk of injury to all parties involved.

In addition, the iBooster can ensure comfortable deceleration when adaptive cruise control (ACC) is active until the vehicle has reached a standstill – and it generates virtually no noise or vibration in the process. This is a significant benefit for quiet electric vehicles, as ambient sounds are much more noticeable in these vehicles.

Automated driving

In combination with the ESP® from Bosch, the iBooster provides the braking system redundancy required by automated vehicles for safety reasons. Both systems have a direct mechanical push-through mechanism on the brakes and can brake the vehicle independently over the entire deceleration range.

Robert Bosch GmbH
Chassis Systems Control

Robert-Bosch-Allee 1
74232 Abstatt
Germany

www.bosch-automotivetechnology.com

Printed in Germany
292000P12J-C/CCA-201308-En